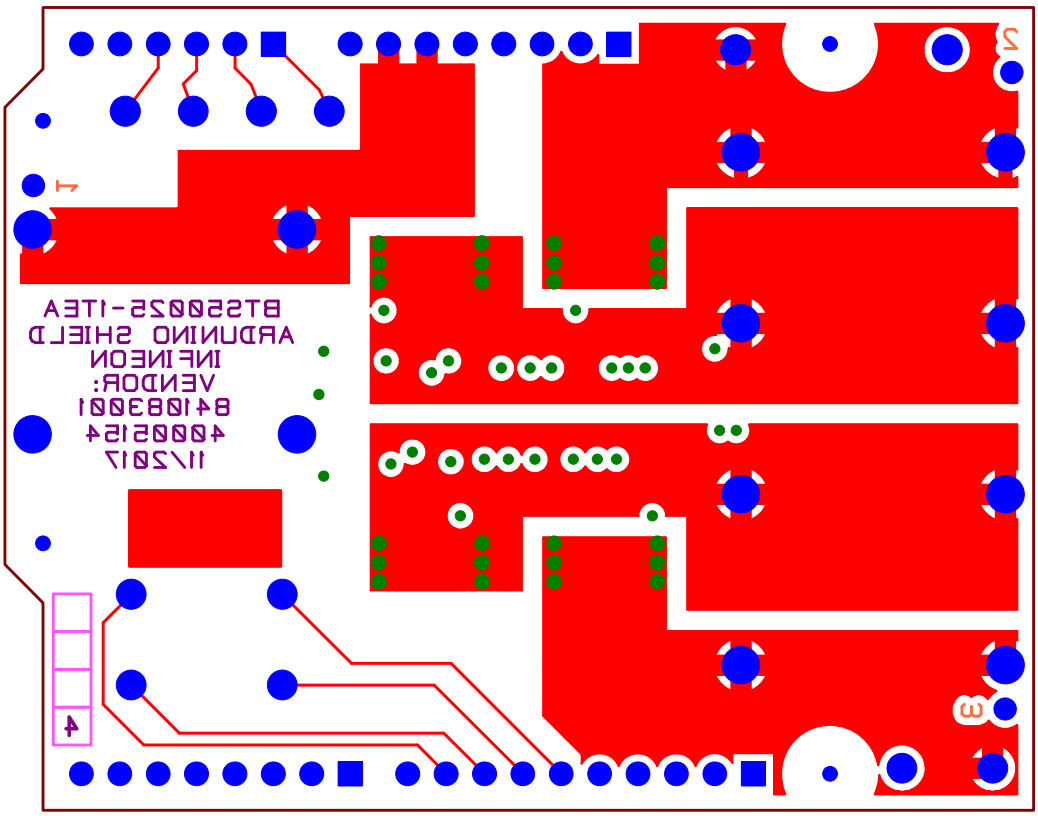
BTS50025-1TEA
ARDUNINO SHIELD
INFINEON
VENDOR:
841083001
400051S4
11\2017
1
2
3
4